Concealed plate mounting

Four proposed rear studs leave the operator-facing surface clear.

FRONT / OPERATOR VIEW



Satin charcoal finish on a 316L stainless face. 160 x 86 mm face with 6 mm corner radii.

REAR / BEFORE FITTING

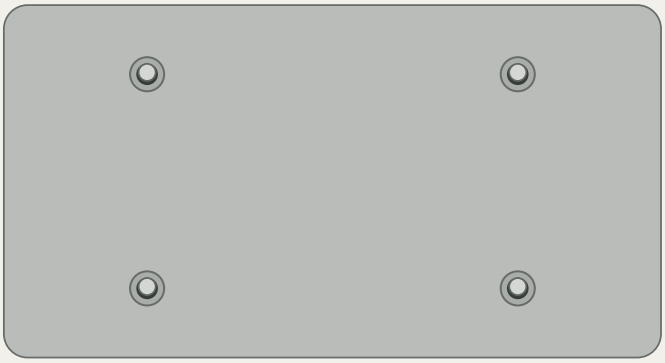

Four proposed rear-welded stainless studs sit in a broad rectangular pattern.

Through one fixing

SECTION / ENLARGED

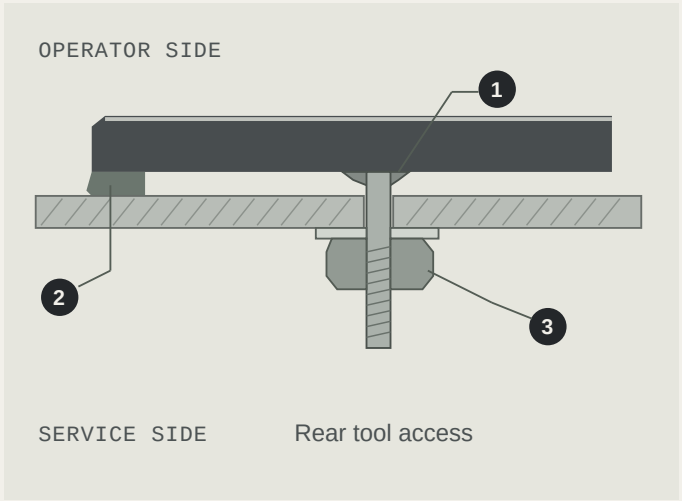

1 Stud and plate
Welded to the reverse of the face. The visible surface stays closed.

2 Sealed interface
Use a continuous, cleanable seal matched to the panel and cleaning regime.

3 Internal retention
A compatible washer and stainless prevailing-torque locknut retain each stud.

Where it can mount

Use an OEM-approved, fixed, non-food-contact outer panel with rear access. For a retrofit, preassemble the plate on a carrier secured to approved frame fixing points. Keep the machine ID, warnings and access panels clear.

PROTOTYPE CHECK

Confirm the food zone and service temperature. Prove finish durability, vibration retention, cleaning, sealing and service clearance on the actual panel with the operator and OEM.